TensionLIte Plus Custom 10ft. Modular Exhibit Design 6

Total graphic area: 70.25"w X 100.25"h
Total finished area: 66.25"w X 96.25"h

Please be sure to include the 2" bleed around the perimeter (note trim & stitch locations on template). DO NOT design any critical elements (text, logos, etc.) within 2" of the edge.

General Art Guidelines:

- CMYK Color Mode
- All Solid Coated Pantone colors should be called out in the art as spot colors
- Embed all images and support files
- Resolution must be 100-120 ppi
- All fonts must be created to outlines
- Do not scale artboard
- Background color/images must bleed to the edge of artboard
- Do not use spot colors from template in your artwork as they will not print

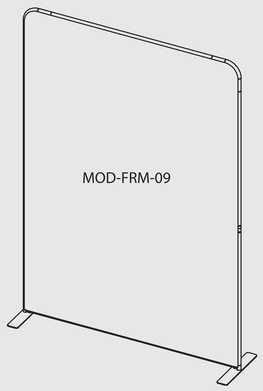

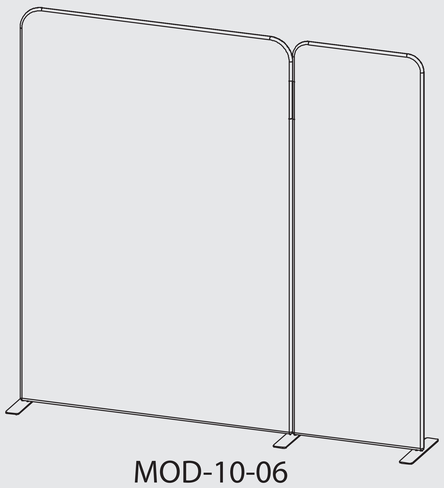

MOD-10-06

10' Modulate Kit 06:
Frame 10

Total graphic area: 36.5"w X 100.25"h
Total finished area: 32.5"w X 96.25"h

Please be sure to include the 2" bleed around the perimeter (note trim & stitch locations on template). DO NOT design any critical elements (text, logos, etc.) within 2" of the edge.

General Art Guidelines:

- CMYK Color Mode
- All Solid Coated Pantone colors should be called out in the art as spot colors
- Embed all images and support files
- Resolution must be 100-120 ppi
- All fonts must be created to outlines
- Do not scale artboard
- Background color/images must bleed to the edge of artboard
- Do not use spot colors from template in your artwork as they will not print

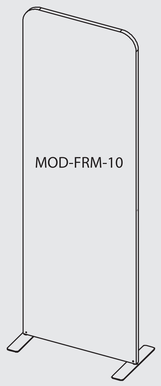

bleed area
trim line
safe zone