TensionLite Plus 10 ft. Wave Shape Mural Wall 6 ft. Header Design 3

Header:
Total Graphic Area: 71.875"w X 12.8125"h
Total Visual Area: 70.875"w X 11.8125"h

Use separate template for wave graphic. This template only represents the header panels.

Please be sure to include the 1/2" bleed around the perimeter to compensate for the finishing of the rigid sintra graphics.
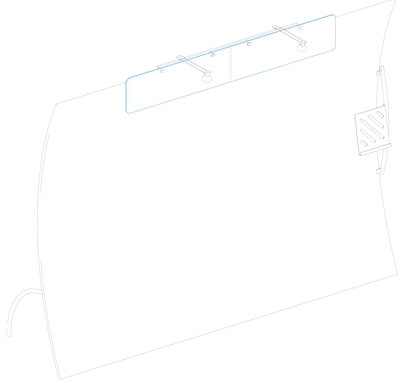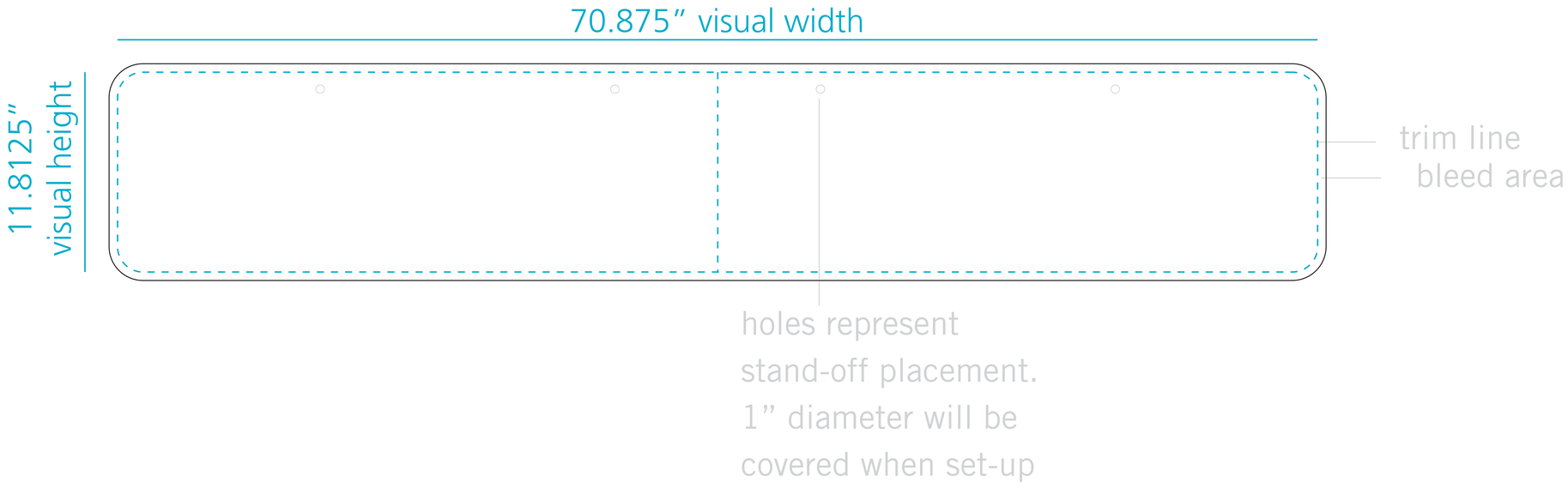
General Artwork Guidelines
- cmyk color mode
- do not embed images, supply them
- resolution must be 100-120 ppi
- all fonts must be created to outlines